ALICE
CERAMICA

SERIES: CONFORT

OBJECT: VASO MBL ECO A/P

CODE: 100119

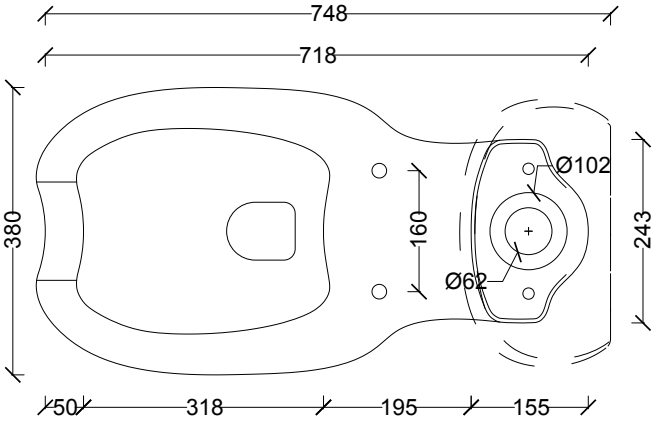

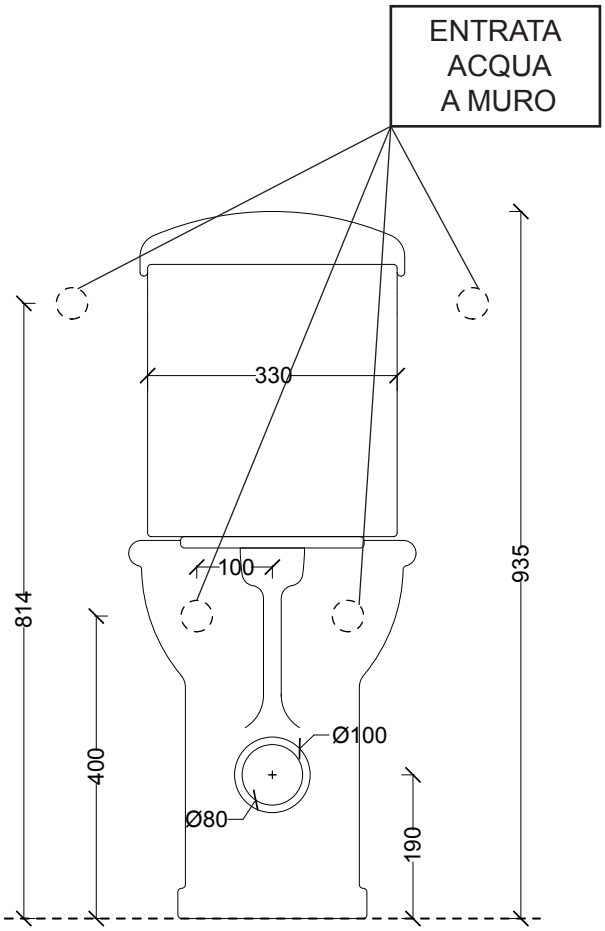

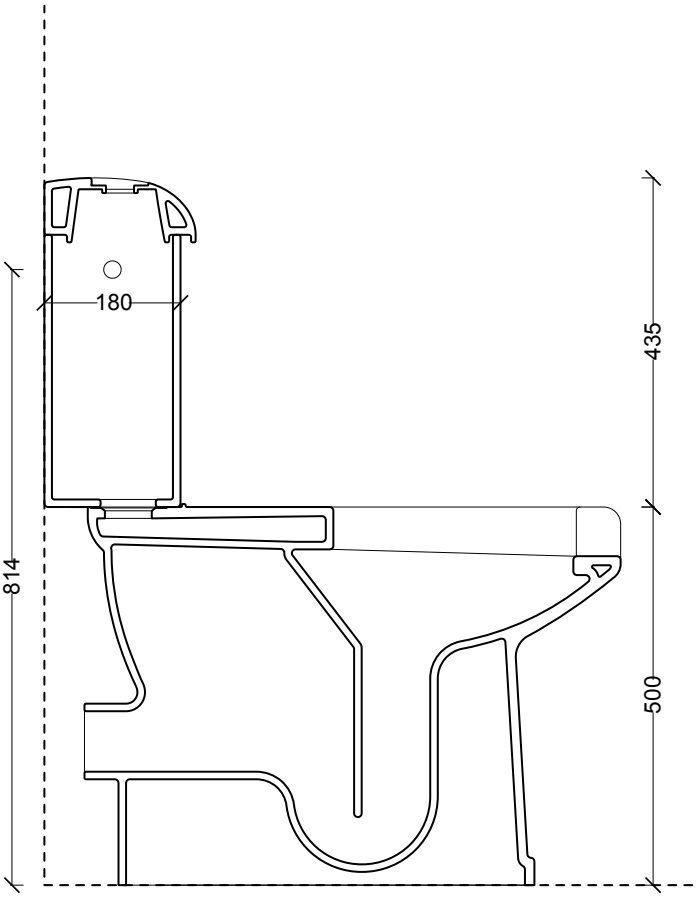

ALICE Ceramica S.r.l.
Via Sassacci, 17 · 01033 Civita Castellana (VT)
Info@aliceceramica.it · www.aliceceramica.com