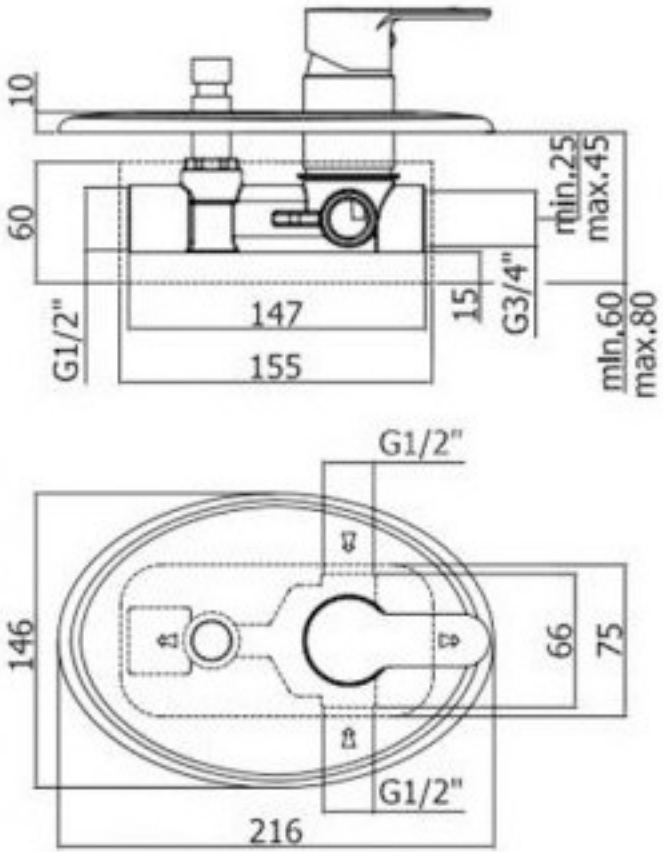
10
60
G1/2"
147
155
15
G3/4"
min.25
max.45
min.60
max.80
G1/2"
146
66
75
G1/2"
216