FAS100/SOSP

Vaso sospeso
Wall/hung w.c.

Dimensioni/dimensions: 51,5x36,5xH42 cm
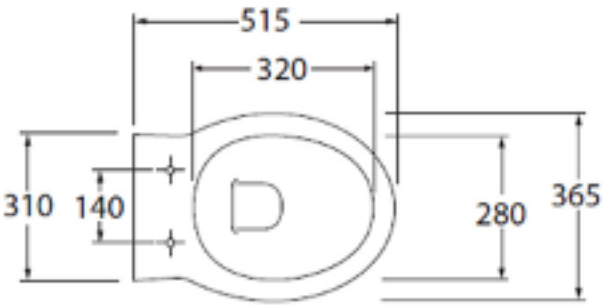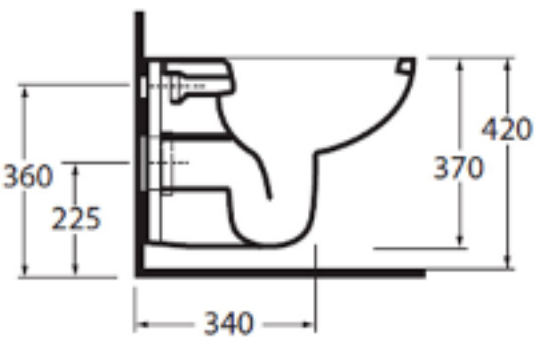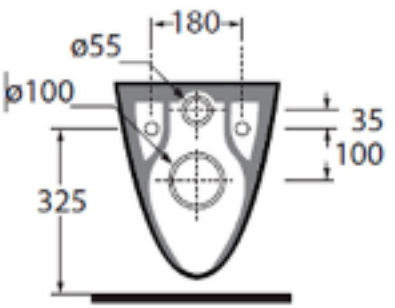
Peso/weight: 20 kg